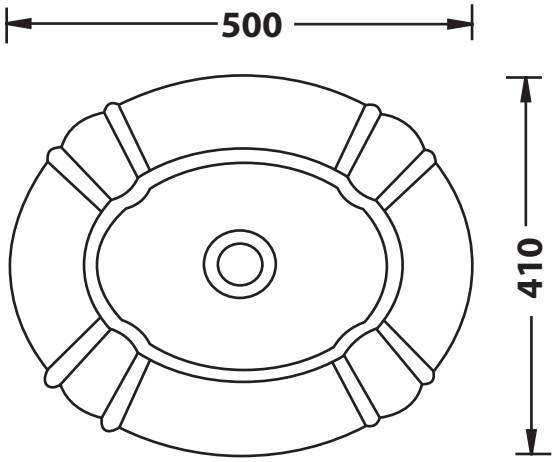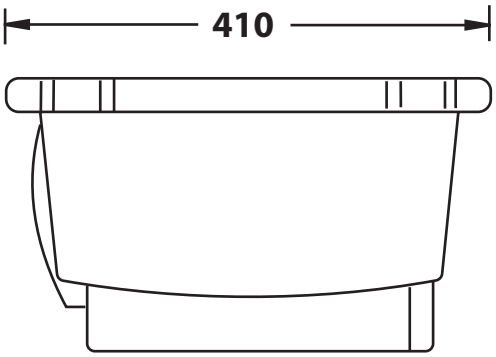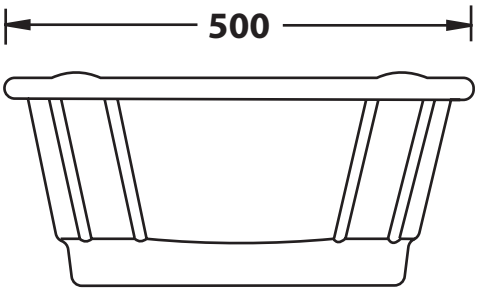BAROCCO DROP-IN BASIN TECHNICAL DRAWING