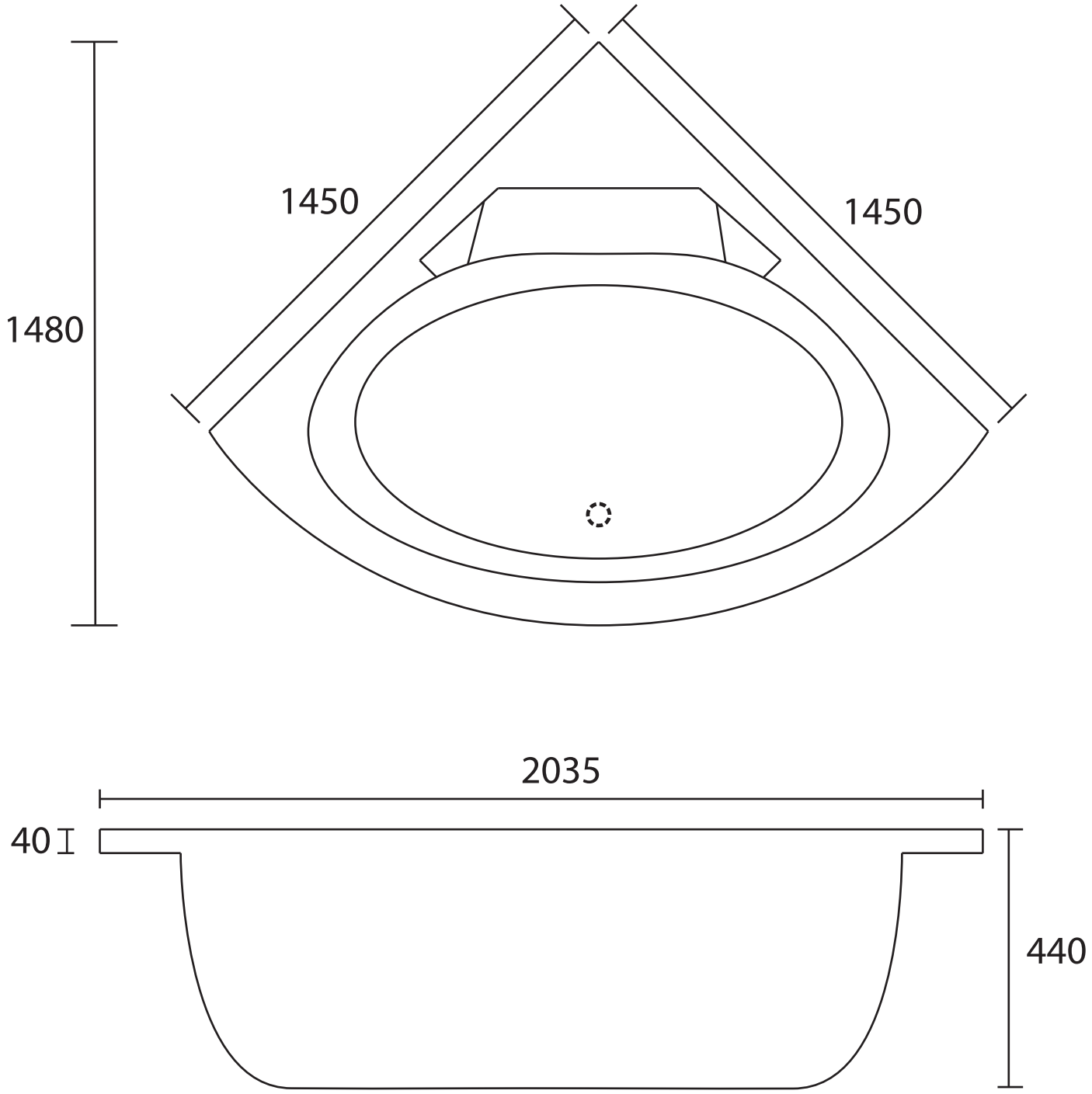Pyramid 1500 Corner Drop In Bath Technical Drawing