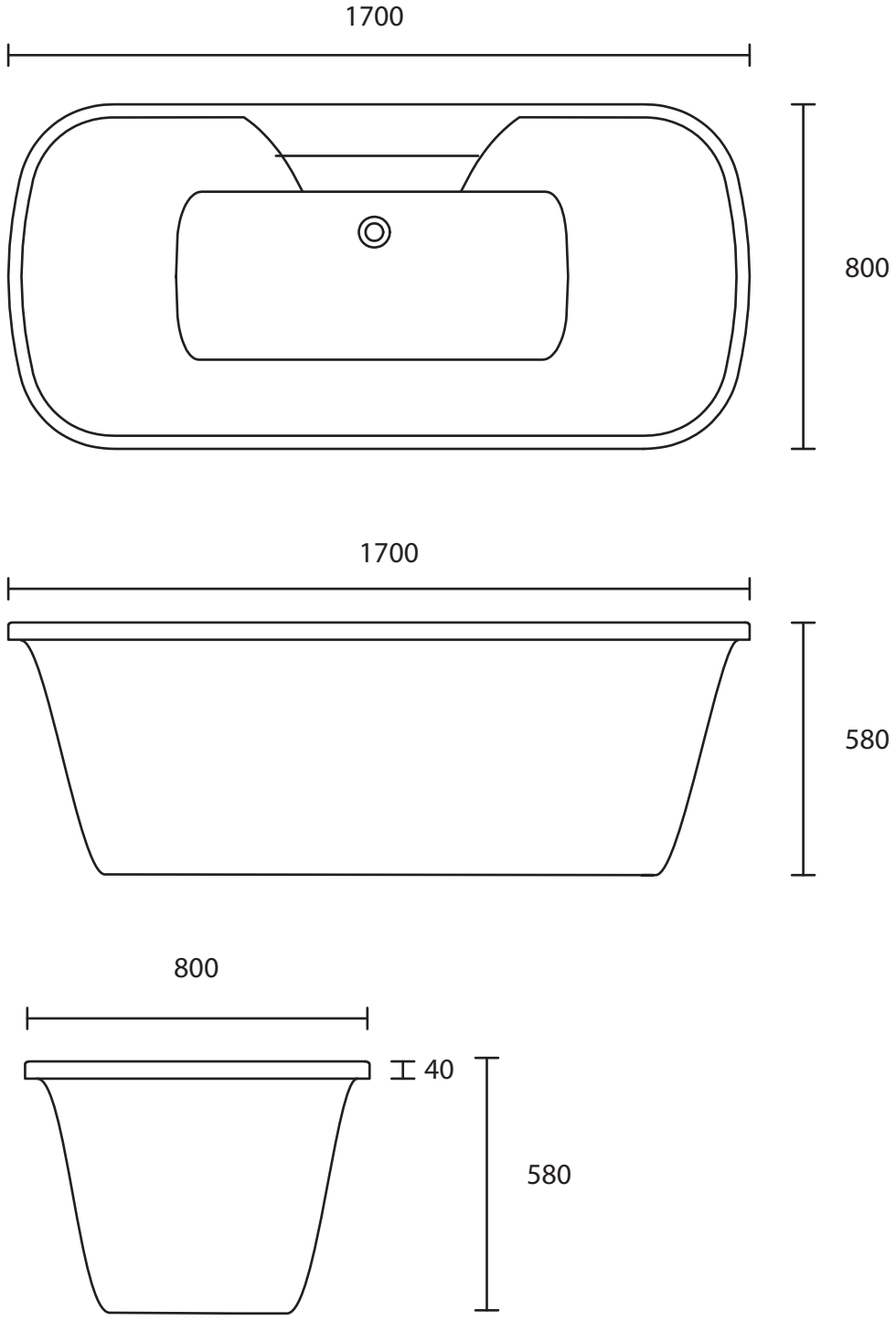Vogue Seamless 1700 Free Standing Bath